SPECIFICATION
FOR
LCM+CTP Module

MODULE:	KD018QVFIN016-C001A
CUSTOMER:	

REV	DESCRIPTION	DATE

STARTEK	INITIAL	DATE
PREPARED BY		
CHECKED BY		
APPROVED BY		

CUSTOMER	INITIAL	DATE
APPROVED BY		

ISO9001：2008 ISO/TS16949：2009

Revision History

Date	Rev. No.	Page	Summary
2019.07.15	V1.0	ALL	FIRST ISSUE

ISO9001：2008 ISO/TS16949：2009

Contents

1.Basic Specifications....4
1.1 TFT Features....4
1.2 CTP Features....4
2. Block Diagram....5
3. Outline dimension....6
4. Input terminal Pin Assignment....7
4.1 TFT PIN Define....7
4.2 CTP PIN Define....8
5. LCD Optical Characteristics....9
5.1 Optical specification....9
5.2 Measuring Condition....9
5.3 Measuring Equipment....10
6. Electrical Characteristics....12
6.1 Absolute Operation Rating (Ta=25 VSS=0V)....12
6.2 DC Electrical Characteristics....12
6.3 LED Backlight Characteristics....13
7. AC Characteristic....15
7.1 Reset Input Timing....15
7.2 Timings for DSI Video mode....16
8. CTP Specification....18
8.1 Electrical Characteristics....18
8.1.1 Absolute Maximum Rating....18
8.1.2 DC Electrical Characteristics (Ta=25℃)....18
8.1.3 AC Characteristics....19
8.2 POWER ON/Reset Sequence....19
9. LCD Module Out-Going Quality Level....21
9.1 VISUAL & FUNCTION INSPECTION STANDARD....21
9.1.1 Inspection conditions....21
9.1.2 Definition....21
9.1.3 Sampling Plan....22
9.1.4 Criteria (Visual)....23
10. Reliability Test Result....28
11. Cautions and Handling Precautions....29
11.1 Handling and Operating the Module....29
11.2 Storage and Transportation....29
12. Packing....30

ISO9001：2008 ISO/TS16949：2009

1.Basic Specifications

* Description

This is a color active matrix TFT (Thin Film Transistor) LCD (liquid crystal display) that uses amorphous silicon TFT as a switching device. This module is composed of a Transmissive type TFT-LCD Panel, driver circuit,capacitance touch panel,back-light unit. The resolution of a 1.77' TFT-LCD contains 240X320 pixels, and can display up to 65K/262K colors.

1.1 TFT Features

General Information Items	Specification	Unit	Note
	Main Panel		
Display area(AA)	26.64(H)*35.52(V) (1.77inch)	mm	-
Driver element	TFT active matrix	-	-
Display colors	65K/262K	colors	-
Number of pixels	240(RGB)*320	dots	-
Pixel arrangement	RGB vertical stripe	-	-
Pixel pitch	0.111(H)*0.111(V)	mm	-
Viewing angle	ALL	o'clock	-
Controller IC	JD9852	-	-
LCM Interface	MIPI+one data lane	-	-
Display mode	Transmissive/Normally Black	-	-
Operating temperature	-20～+70	℃	-
Storage temperature	-30～+80	℃	-
Module bonding technology	Use Tape bonding between LCM and CTP	–	

1.2 CTP Features

General Information Items	Specification	Unit	Note
	Main Panel		
Resolution	240(H)*320(V)	-	
Structure	G+G	-	
Controller IC	FT5436	-	
Interface	I2C	-	
Slave Adress	0x38(7bit)/8bit:0x70(Write) 0x71(Read)	-	
Touch mode	Single point and Gestures	-	-

ISO9001:2008 ISO/TS16949:2009

*** Mechanical Information**

Item		Min.	Typ.	Max.	Unit	Note
Module size	Horizontal(H)		39.7		mm	-
	Vertical(V)		52.5		mm	-
	Depth(D)		4.85		mm	-
Weight			TBD		g	-

ISO9001：2008 ISO/TS16949：2009

2. Block Diagram

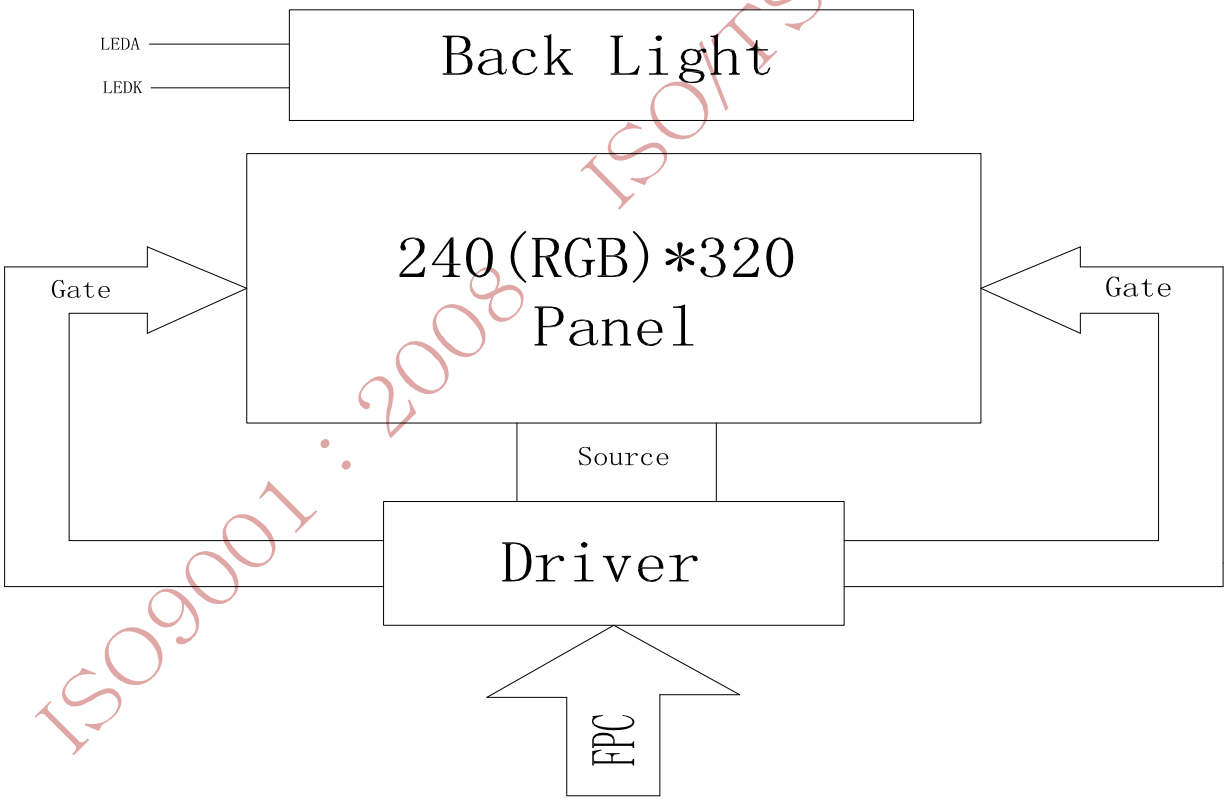

3. Outline dimension

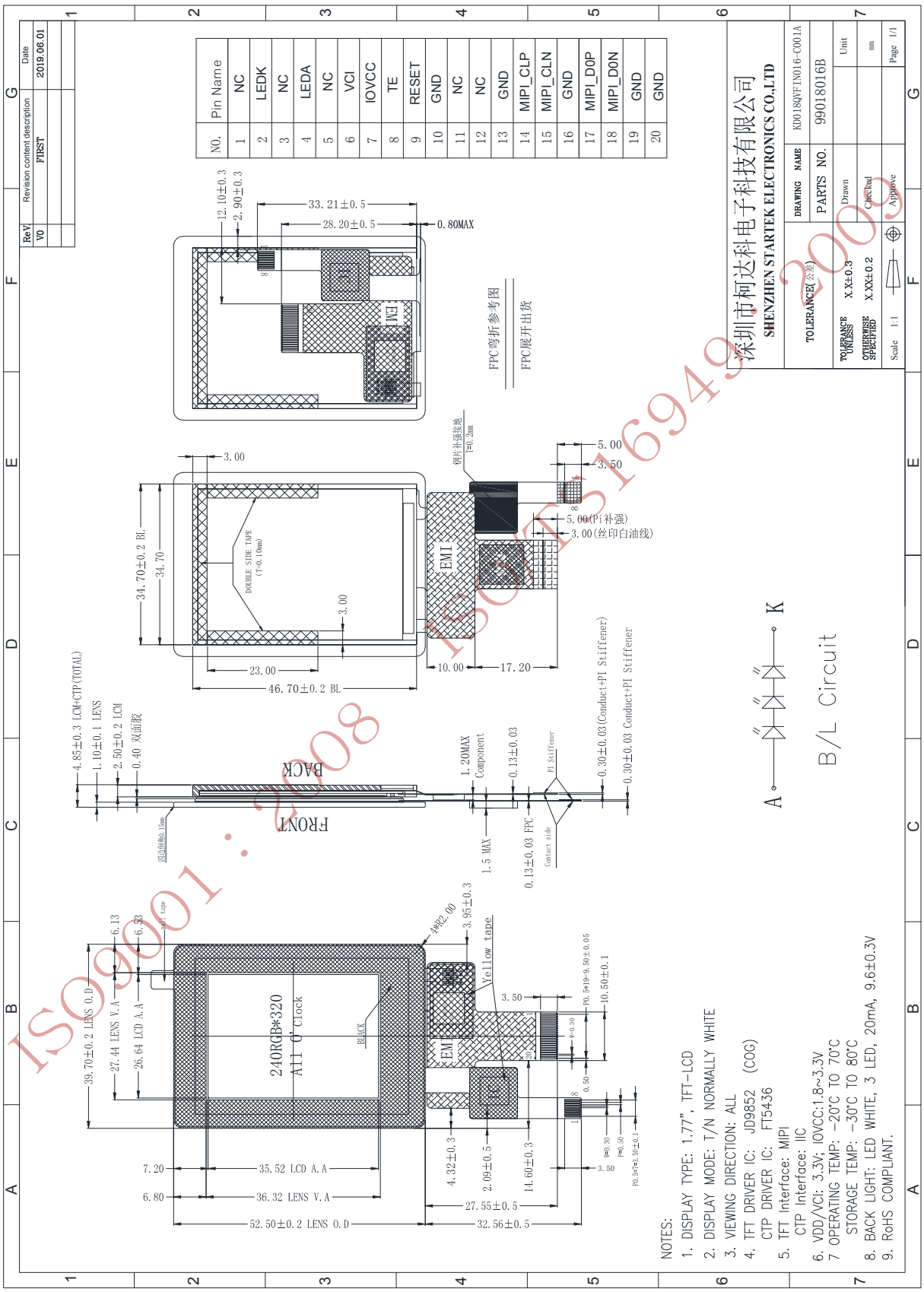

ISO9001：2008 ISO/TS16949:2009

4. Input terminal Pin Assignment

4.1 TFT PIN Define

Pin NO.	Symbol	Function	I/O
1	NC		
2	LEDK	Cathode pin of backlight.	P
3	NC		
4	LEDA	Anode pin of backlight.	P
5	NC		
6	VCI	Supply voltage (3.3V).	P
7	IOVCC	Power supply for I/O block(1.8-3.3V)	P
8	TE	Serve as a TE (Tearing Effect) output signal	O
9	RESET	Reset pin. Setting either pin low initializes the LSI. Must be reset after power is supplied.	I
10	GND	Ground.	P
11	NC		
12	NC		
13	GND	Ground.	P
14	MIPI_CLP	DSI Positive polarity of low voltage differential clock signal	I
15	MIPI_CLN	DSI Negative polarity of low voltage differential clock signal	
16	GND	Ground.	P
17	MIPI_D0P	DSI Positive polarity of low voltage differential data signal	I
18	MIPI_D0N	DSI Negative polarity of low voltage differential data signal	I
19	GND	Ground.	P
20	GND	Ground.	P

ISO/TS16949：2009
ISO9001：2008

4.2 CTP PIN Define

NO.	SYMBOL	DISCRIPTION	I/O
1	GND	Ground.	P
2	VDDIO	I/O power supply voltage.	P
3	VDD	Supply voltage.	P
4	SCL	I2C clock input.	I
5	SDA	I2C data input and output	I/O
6	INT	External interrupt to the host.	I
7	RST	External Reset, Low is active.	I
8	GND	Ground.	P

ISO9001：2008 ISO/TS16949：2009

5. LCD Optical Characteristics

5.1 Optical specification

Item		Symbol	Condition	Min.	Typ.	Max.	Unit.	Note
Contrast Ratio		CR	Θ=0 Normal viewing angle	500	600			*
Response time	Rising	$T_{R+}T_F$		--	35	50	msec	*
	Falling							
Color gamut		S(%)		--	49.3	--	%	*
Color Filter Chromacicity	White	W_X		0.2454	0.2854	0.3254		CA310 Test
		W_Y		0.2716	0.3116	0.3516		
	Red	R_X		0.5604	0.6004	0.6404		
		R_Y		0.3208	0.3608	0.4008		
	Green	G_X		0.2958	0.3358	0.3758		
		G_Y		0.5142	0.5542	0.5942		
	Blue	B_X		0.1198	0.1598	0.1998		
		B_Y		0.0732	0.1132	0.1532		
Viewing angle	Hor.	Θ_L	CR>10	60	85	--		*
		Θ_R		60	85	--		
	Ver.	Θ_U		60	85	--		
		Θ_D		60	85	--		
Option View Direction		ALL						

*The data comes from the LCD specification.

5.2 Measuring Condition

■ Measuring surrounding：dark room

■ Ambient temperature：25±2℃

■ 15min. warm-up time.

ISO9001：2008 ISO/TS16949：2009

5.3 Measuring Equipment

Note (1) Definition of Viewing Angle:

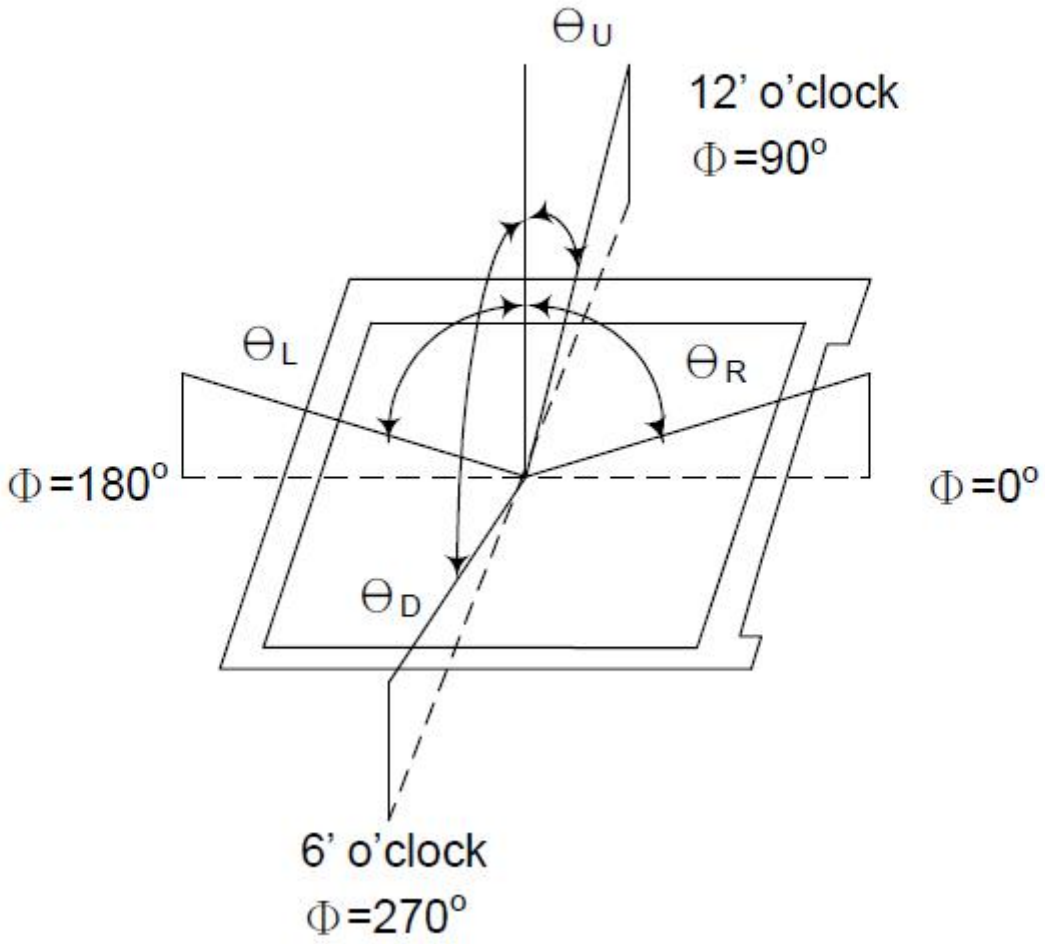

Note (2) Definition of Contrast Ratio (CR):
measured at the center point of panel

$$CR = \frac{\text{Luminance with all pixels white}}{\text{Luminance with all pixels black}}$$

Note (3) Definition of Response Time: Sum of T_R and T_F

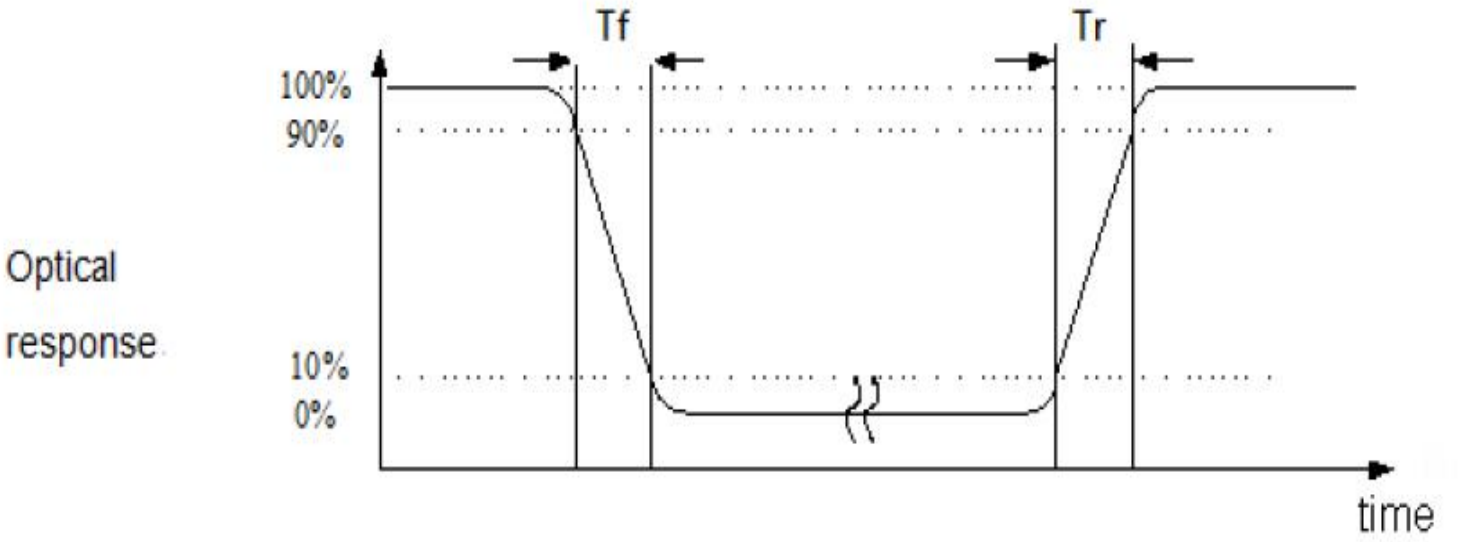

Note (4) Definition of optical measurement setup

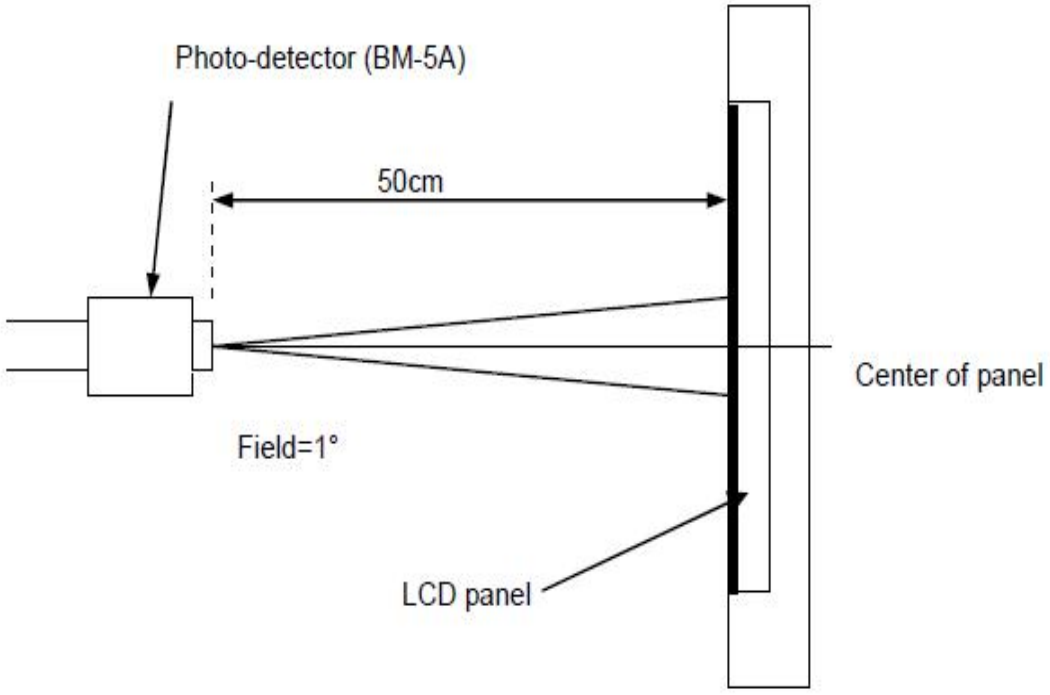

6. Electrical Characteristics

6.1 Absolute Operation Rating (Ta=25 VSS=0V)

Item	Symbol	Rating	Unit
Supply Voltage	VCI	-0.3~4.6	**V**
Digital interface supply Voltage	IOVCC	-0.3~4.6	**V**
Operating temperature	T_{OP}	-20~+70	℃
Storage temperature	T_{ST}	-30~+80	℃

Note: If one of the above items is exceeded its maximum limitation momentarily, the quality of the product may be degraded. Absolute maximum limitation, therefore, specify the values exceeding which the product may be physically damaged. Be sure to use the product within the recommend range.

6.2 DC Electrical Characteristics

Parameter	Symbol	Min.	Typ.	Max.	Unit	Note
Supply Voltage	VCI	2.4	3.3	3.6	V	
Digital interface supply Voltage	IOVCC	1.65	1.8	3.3	V	
Normal mode Current consumption	IDD	--	11	--	mA	
Level input voltage	V_{IH}	0.7 IOVCC		IOVCC	V	
	V_{IL}	GND		0.3 IOVCC	V	
Level output voltage	V_{OH}	0.8 IOVCC		IOVCC	V	
	V_{OL}	GND		0.2 IOVCC	V	

ISO9001：2008 ISO/TS16949：2009

6.3 LED Backlight Characteristics

The back-light system is edge-lighting type with 4 chips White LED

Item	Symbol	Min.	Typ.	Max.	Unit	Note
Forward Current	I_F	15	20	--	mA	
Forward Voltage	V_F	--	9.6	--	V	
LCM Luminance	L_V	400	450	--	cd/m2	Note3
LED life time	Hr	50000	--	--	Hour	Note1,2
Uniformity	AVg	80	--	--	%	Note3

Note (1) LED life time (Hr) can be defined as the time in which it continues to operate under the condition: Ta=25±3 ℃, typical IL value indicated in the above table until the brightness becomes less than 50%.

Note (2) The “LED life time” is defined as the module brightness decrease to 50% original brightness at Ta=25℃ and IL=20mA. The LED lifetime could be decreased if operating IL is larger than 20mA. The constant current driving method is suggested.

ISO9001：2008
ISO/TS16949：2009

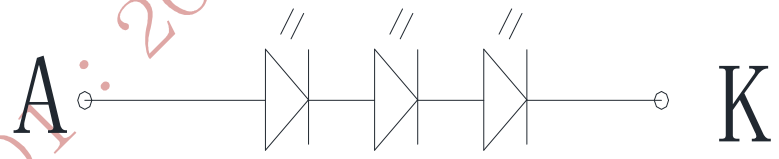

B/L Circuit

NOTE 3：Luminance Uniformity of these 9 points is defined as below:

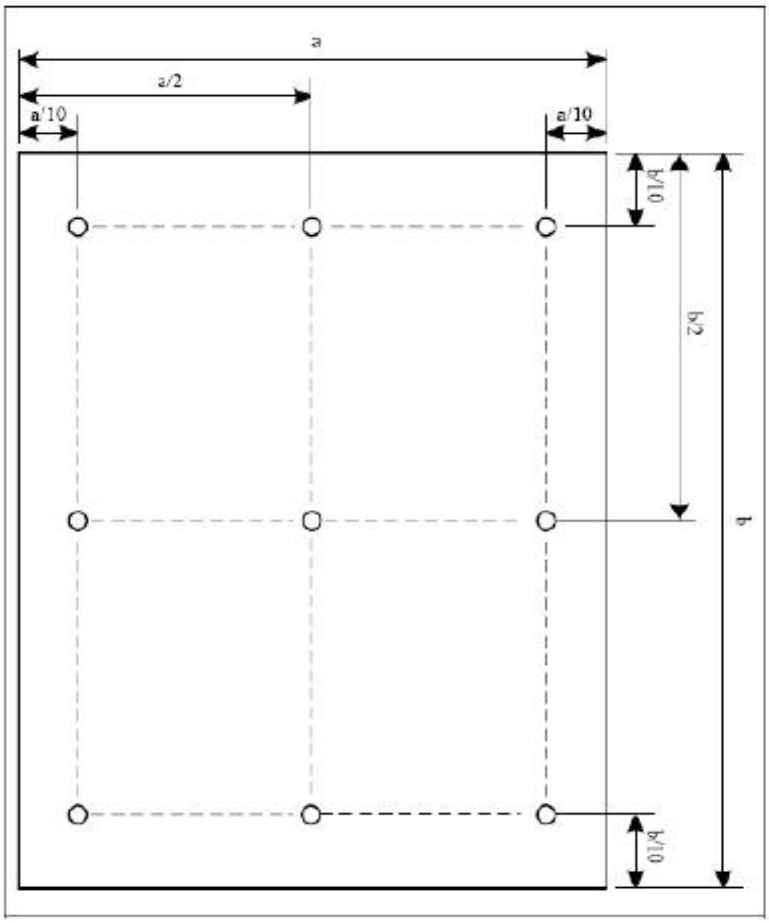

$$\text{Uniformity} = \frac{\text{minimum luminance in 9 points (1-9)}}{\text{maximum luminance in 9 points (1-9)}}$$

$$\text{Luminance} = \frac{\text{Total Luminance of 9 points}}{9}$$

ISO9001

7. AC Characteristic

7.1 Reset Input Timing

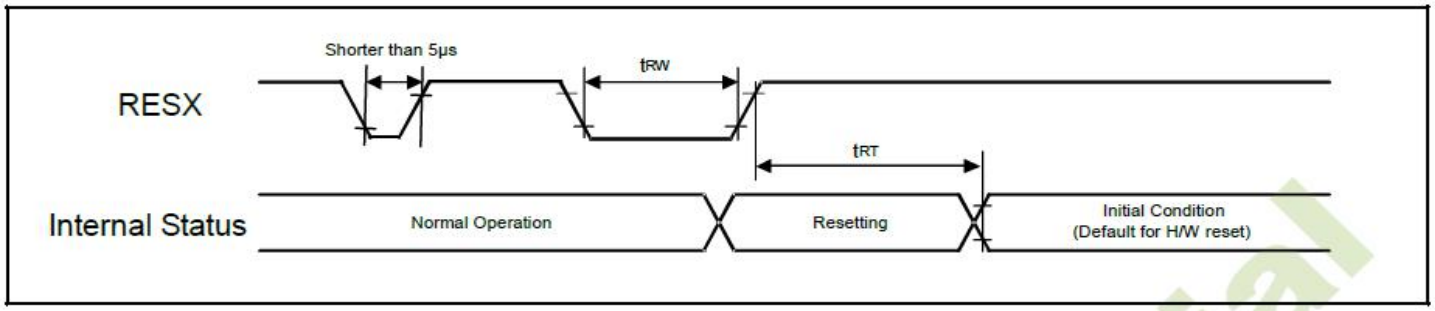

* Reset input timings

Symbol	Parameter	Related pins	Min.	Max.	Unit
t_{RW}	Reset pulse width(2)	RESX	10	-	μs
t_{RT}	Reset complete time(3)	-	-	5 (Note 5)	ms
		-	-	120 (Note 6, 7)	ms

Note: (1) The reset complete time also required time for loading ID bytes from OTP to registers. This loading is done every time when there is HW reset cancel time (tRT) within 5 ms after a rising edge of RESX.

(2) Spike due to an electrostatic discharge on RESX line does not cause irregular system reset according to the table below.

RESX Pulse	Action
Shorter than 5 μs	Reset Rejected
Longer than 10 μs	Reset
Between 5 μs and 10 μs	Reset Start

(3) During the resetting period, the display will be blanked (The display is entering blanking sequence, which maximum time is 120 ms, when Reset Starts in Sleep Out –mode. The display remains the blank state in Sleep In –mode) and then returns to Default condition for H/W reset.

(4) Spike Rejection also applies during a valid reset pulse as shown below:

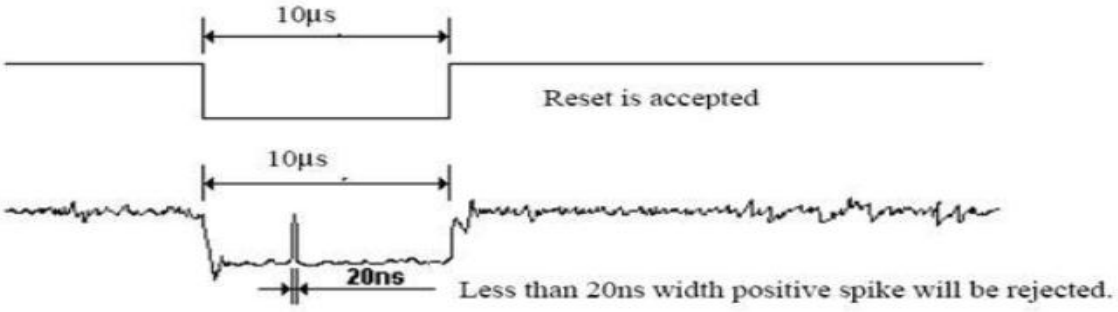

(5) When Reset is applied during Sleep In Mode.

(6) When Reset is applied during Sleep Out Mode.

(7) It is necessary to wait 5msec after releasing RESX before sending commands. Also Sleep Out command cannot be sent for 120msec.

7.2 Timings for DSI Video mode

Vertical Timings

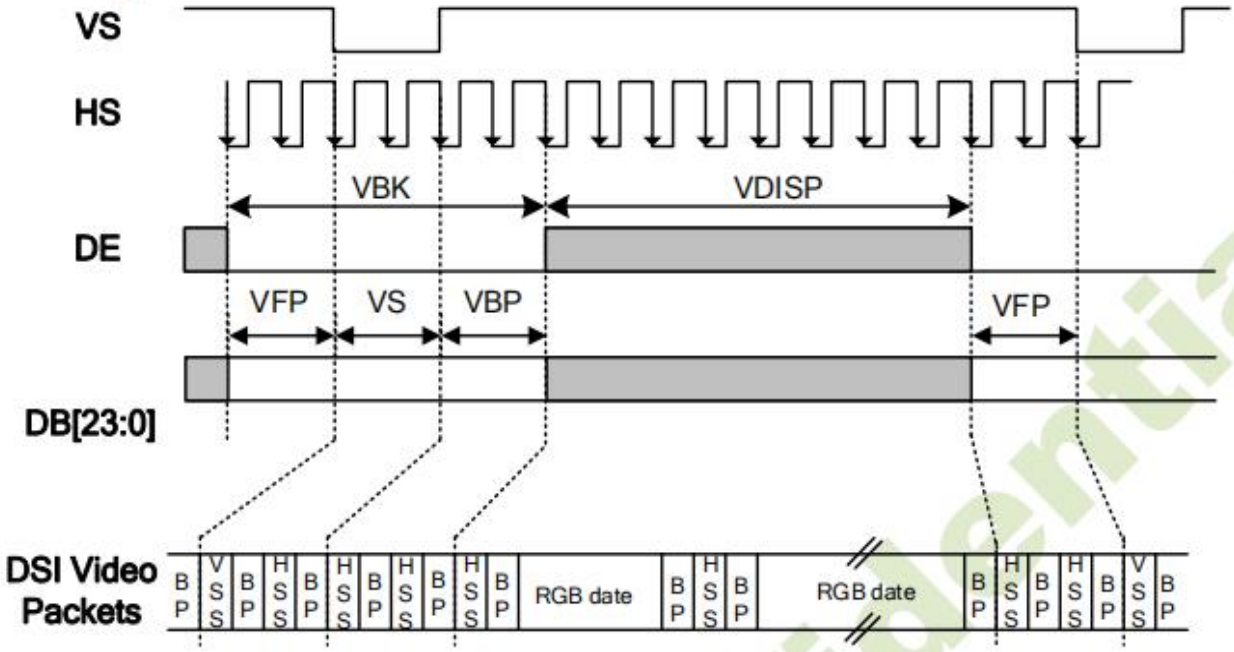

Vertical Timings for DSI Video mode I/F

Resolution=240x320 (TA=25°C, IOVCC=1.8V, VCI=2.8V)

Item	Symbol	Condition	Min.	Typ.	Max.	Unit
Vertical low pulse width	VS	-	2	-	Note(1)	Line
Vertical front porch	VFP	-	2	-	-	Line
Vertical back porch	VBP	-	2	-	Note(1)	Line
Vertical blanking period	VBK	VS+VBP+VFP	6	-	-	Line
Vertical active area	-	VDISP	-	320	-	Line
Vertical Refresh rate	VRR	-	-	60	-	Hz

Vertical Timings for DSI Video mode I/F

ISO- ver confidential

Horizontal Timings

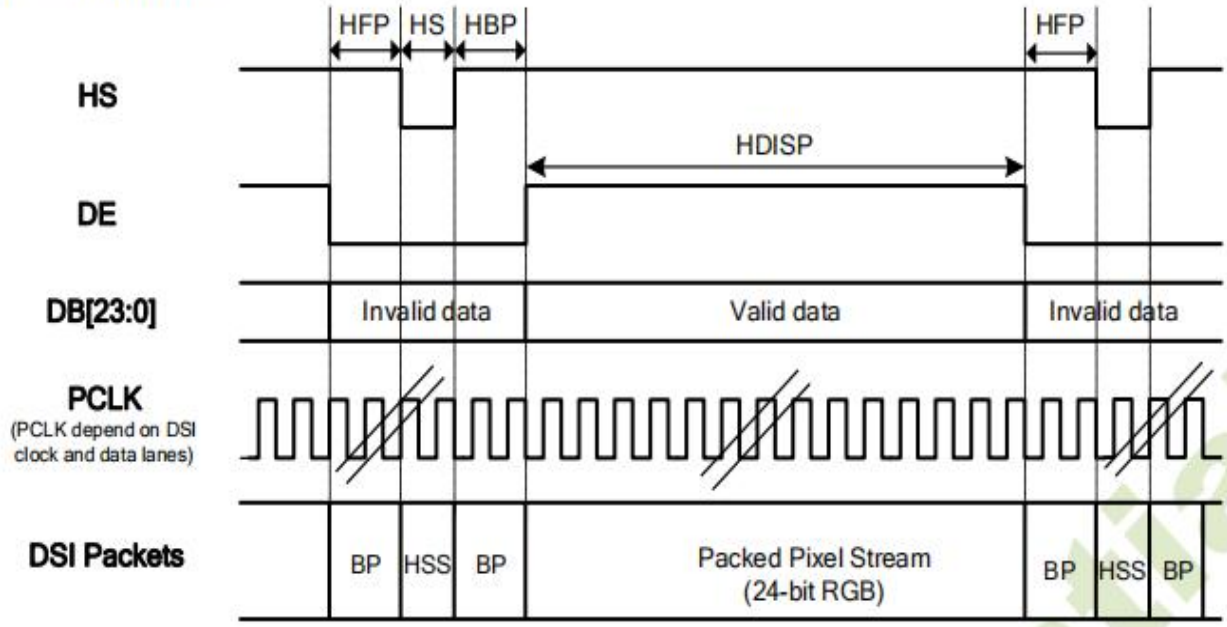

Horizontal Timing for DSI Video mode I/F

Resolution=240x320 (TA=25°C, IOVCC=1.8V, VCI=2.8V)

Item	Symbol	Condition	Min.	Typ.	Max.	Unit
HS low pulse width	HS	-	6	-	78	DCK
Horizontal back porch	HBP	-	5	-	78	DCK
Horizontal front porch	HFP	-	5	-	78	DCK
Horizontal blanking period	HBLK	HS+HBP+HFP	16	-	88	DCK
Horizontal active area	HDISP	-	-	240	-	DCK

Note: (1) HS+HBP>0.5uS.

(2) HFP>0.5uS.

Horizontal Timings for DSI Video mode I/F

Confidential
ISO90

8. CTP Specification

8.1 Electrical Characteristics

8.1.1 Absolute Maximum Rating

Item	Symbol	Min.	Max.	Unit	Note
Power Supply Voltage	VDD	2.7	3.6	V	--
Operating temperature	T_{OP}	-40	+85	℃	--
Storage temperature	T_{ST}	-55	+150	℃	--

8.1.2 DC Electrical Characteristics (Ta=25℃)

(Ambient temperature:25℃, AVDD=2.8V, VDDIO=1.8V or VDDIO=AVDD)

Item	Symbol	Unit	Test Condition	Min.	Typ.	Max.	Note
Input high-level voltage	VIH	V		0.7 x IOVCC	--	IOVCC	
Input low -level voltage	VIL	V		-0.3	--	0.3 x IOVCC	
Output high -level voltage	VOH	V	IOH=3mA	0.7 x IOVCC	--	--	
Output low -level voltage	VOL	V	IOL=4.5mA	--	--	0.3 x IOVCC	
I/O leakage current	ILI	uA	Vin=0~VDD3	-1	--	1	
Current consumption (Normal operation mode)	Iopr	mA	VDD3 = 3V Ta=25℃	--	11	--	
Current consumption (Monitor mode)	Imon	mA	VDD3 = 3V Ta=25℃	--	0.43	--	
Current consumption (Sleep mode)	Islp	uA	VDD3 = 3V Ta=25℃	--	42	--	
Step-up output voltage	VDD5	V	VDD3= 2.8V		0.25		
Step-up output voltage	VDD10	V	VDD3= 2.8V		0.5		
Power Supply voltage	VDD3	V		2.7	--	3.6	

Notes: This sample data is intended for design guidance only. Values shown are typical for a 15Tx × 24Rx sensor configured at 80 Hz report rate.Actual current will depend on the particular sensor design and firmware options.

S16949：2009
CONFIDENTIAL

8.1.3 AC Characteristics

AC Characteristics of Oscillators

Item	Symbol	Unit	Test Condition	Min.	Typ.	Max.	Note
OSC clock 1	fosc1	MHz	VDD3 = 2.8V; Ta=25℃	49	50	51	

Table 3-3 AC Characteristics of TX & RX

Item	Symbol	Test Condition	Min	Typ	Max	Unit	Note
TX acceptable clock	ftx		50	150	400	KHz	
TX output rise time	Ttxr		--	210	--	nS	
TX output fall time	Ttxf		--	210	--	nS	
RX input voltage	Trxi		1.2	--	1.6	V	

8.2 POWER ON/Reset Sequence

Reset should be pulled down to be low before powering on and powering down. I2C shouldn't be used by other devices during Reset time after VDD powering on (Trtp). INT signal will be sent to the host after initializing all parameters and then start to report points to the host. If Power is down, the voltage of supply must be below 0.3V and Tpdt is more than 1ms.

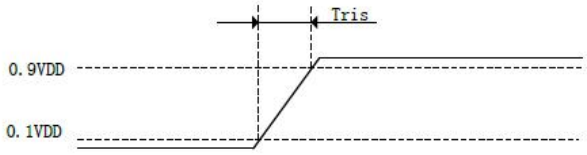

Figure 3-3 Power on time

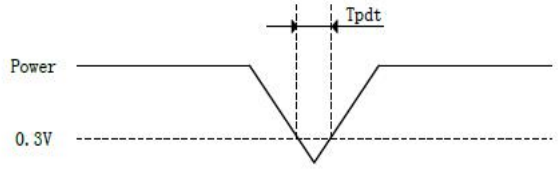

Figure 3-4 Power Cycle requirement

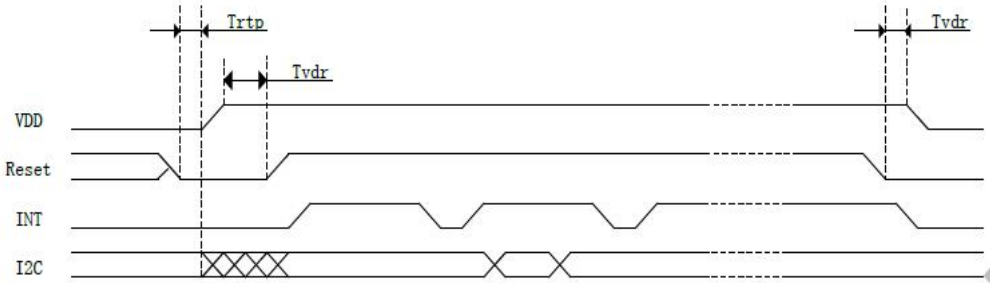

Figure 3-5 Power on Sequence

Reset time must be enough to guarantee reliable reset, the time of starting to report point after resetting approach to the time of starting to report point after powering on.

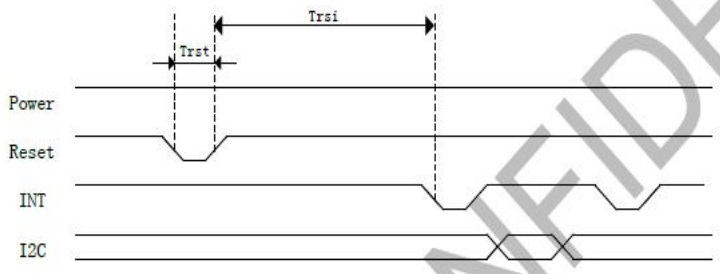

Table 3-5 Power on/Reset Sequence Parameters

Parameter	Description	Min	Max	Units
Tris	Rise time from 0.1VDD to 0.9VDD	--	5	ms
Tpdt	Time of the voltage of supply being below 0.3V	5	--	ms
Trtp	Time of resetting to be low before powering on	100	--	μs
Tvdr	Reset time after VDD powering on	1	--	ms
Trsi	Time of starting to report point after resetting	--	200	ms
Trst	Reset time	1	--	ms

PRELIMINARY - CONFIDENTIAL

9. LCD Module Out-Going Quality Level

9.1 VISUAL & FUNCTION INSPECTION STANDARD

9.1.1 Inspection conditions

Inspection performed under the following conditions is recommended.

Temperature : 25±5℃

Humidity : 65%±10%RH

Viewing Angle : Normal viewing Angle.

Illumination: Single fluorescent lamp (300 to 700Lux)

Viewing distance:30-50cm

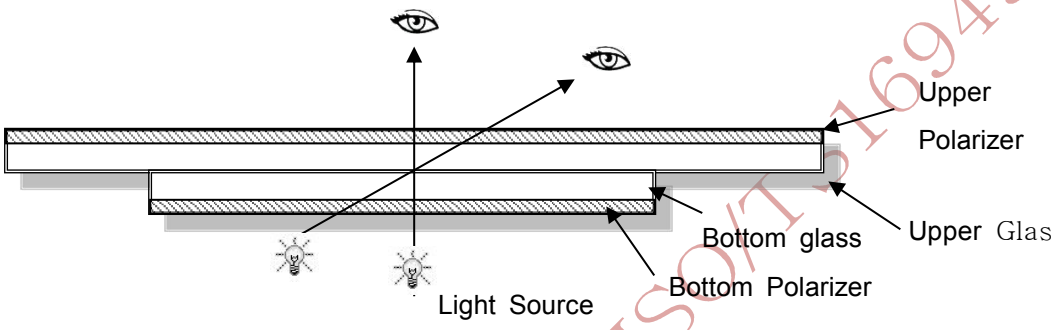

9.1.2 Definition

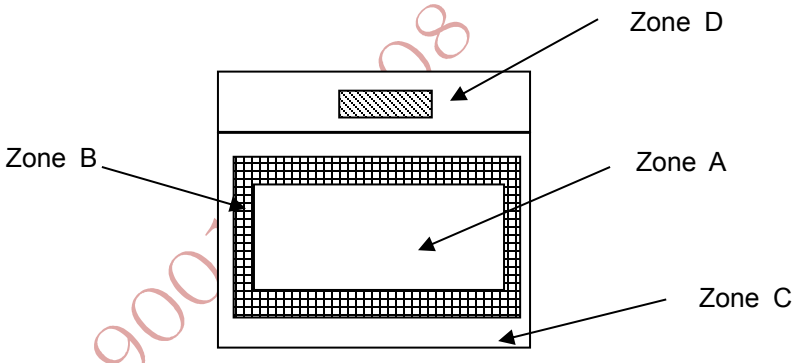

Zone A : Effective Viewing Area(Character or Digit can be seen)

Zone B : Viewing Area except Zone A

Zone C : Outside (Zone A+Zone B) which can not be seen after assembly by customer .)

Zone D : IC Bonding Area

Note:

As a general rule ,visual defects in Zone C can be ignored when it doesn't effect product function or ap pearance after assembly by customer

ISO/TS16949：2009

9.1.3 Sampling Plan

According to GB/T 2828-2003 ; , normal inspection, Class Ⅱ

AQL:

Major defect	Minor defect
0.65	1.5

LCD: Liquid Crystal Display , TP: Touch Panel , LCM: Liquid Crystal Module

No	Items to be inspected	Criteria	Classification of defects
1	Functional defects	1) No display, Open or miss line 2) Display abnormally, Short 3) Backlight no lighting, abnormal lighting. 4) TP no function	Major
2	Missing	Missing component	
3	Outline dimension	Overall outline dimension beyond the drawing is not allowed	
4	Color tone	Color unevenness, refer to limited sample	Minor
5	Spot Line defect	Light dot，Dim spot,Polarizer Bubble ; Polarizer accidented spot.	
6	Soldering appearance	Good soldering , Peeling off is not allowed.	
7	LCD/Polarizer/TP	Black/White spot/line, scratch, crack, etc.	

ISO9001：2008 ISO/TS16949：2009

9.1.4 Criteria (Visual)

<table>
<tr><th>Number</th><th>Items</th><th>Criteria(mm)</th></tr>
<tr><td rowspan="3">1.0 LCD Crack/Broken
NOTE:
X: Length
Y: Width
Z: Height
L: Length of ITO,
T: Height of LCD</td><td>(1) The edge of LCD broken</td><td> 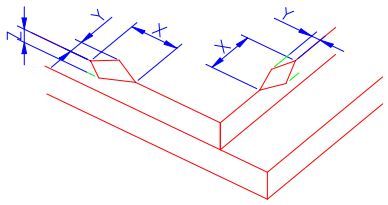
<table><tr><th>X</th><th>Y</th><th>Z</th></tr><tr><td>≤3.0mm</td><td><Inner border line of the seal</td><td>≤T</td></tr></table></td></tr>
<tr><td>(2)LCD corner broken</td><td> 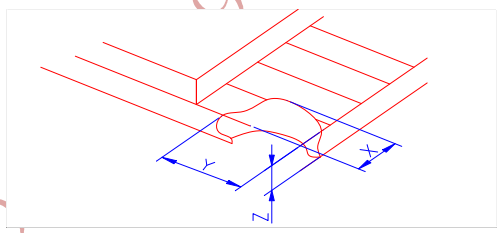
<table><tr><th>X</th><th>Y</th><th>Z</th></tr><tr><td>≤3.0mm</td><td>≤L</td><td>≤T</td></tr></table></td></tr>
<tr><td>(3) LCD crack</td><td> 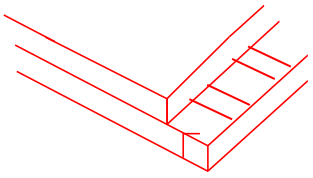
Crack
Not allowed</td></tr>
</table>

ISO9001：2008

2.0

Spot defect

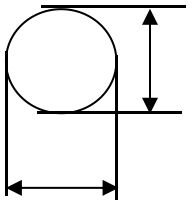

Φ=(X+Y)/2

① light dot（LCD/TP/Polarizer black/white spot , light dot, pinhole, dent, stain）

Zone / Size (mm)	Acceptable Qty		
	A	B	C
Φ≤0.10	Ignore		Ignore
0.10<Φ≤0.20	3(distance≧10mm)		
0.20<Φ≤0.25	2		
Φ>0.3	0		

②Dim spot（LCD/TP/Polarizer dim dot, light leakage、dark spot）

Zone / Size (mm)	Acceptable Qty		
	A	B	C
Φ≤0.1	Ignore		Ignore
0.10<Φ≤0.20	3(distance≧10mm)		
0.20<Φ≤0.25	2		
Φ>0.3	0		

③ Polarizer accidented spot

Zone / Size (mm)	Acceptable Qty		
	A	B	C
Φ≤0.2	Ignore		Ignore
0.3<Φ≤0.5	2(distance≧10mm)		
Φ>0.5	0		

④Pixel bad points（light dot，Dim dot, color dot）

Zone / Size (mm)	Acceptable Qty		
	A	B	C
Φ≤0.1	Ignore		Ignore
0.15<Φ≤0.2	2(distance≧10mm)		
Φ>0.2	0		

⑤ Polarizer Bubble

Zone / Size (mm)	Acceptable Qty		
	A	B	C
Φ≤0.2	Ignore		Ignore
0.3<Φ≤0.4	3(distance≧10		
0.4<Φ≤0.5	2		
Φ>0.5	0		

ISO9001：2008 ISO/TS16949：2009

<table>
<tr><td>3.0</td><td>Line defect (LCD/ TP /Polarizer backlight black/white line, scratch, stain)</td><td>
<table>
<tr><td rowspan="2">Width(mm)</td><td rowspan="2">Length(mm)</td><td colspan="3">Acceptable Qty</td></tr>
<tr><td>A</td><td>B</td><td>C</td></tr>
<tr><td>Φ≤0.03</td><td>Ignore</td><td colspan="2">Ignore</td><td rowspan="3">Ignore</td></tr>
<tr><td>0.03<W≤0.04</td><td>L≤3.0</td><td colspan="2">N≤2</td></tr>
<tr><td>0.04<W≤0.05</td><td>L≤2.0</td><td colspan="2">N≤1</td></tr>
<tr><td>0.05<W</td><td colspan="4">Define as spot defect</td></tr>
</table>
</td></tr>
<tr><td>4.0</td><td>Electronic Components SMT</td><td>Not allow missing parts，solderless connection，cold solder joint，mis match，The positive and negative polarity opposite</td></tr>
<tr><td>5.0</td><td>Display color& Brightness</td><td>1. Color：Measuring the color coordinates, The measurement standard according to the datasheet or samples.
2. Brightness：Measuring the brightness of White screen, The measurement standard according to the datasheet or Samples.</td></tr>
<tr><td>6.0</td><td>LCD Mura</td><td>By 5% ND filter invisible.</td></tr>
<tr><td>7.0</td><td>CTP Related</td><td>CTP Cover sensor accidented black/white spot</td><td>
<table>
<tr><td rowspan="2">Size Φ(mm)</td><td colspan="3">Acceptable Qty</td></tr>
<tr><td>A</td><td>B</td><td>C</td></tr>
<tr><td>Φ≤0.1</td><td colspan="2">Ignore</td><td rowspan="4">Ignore</td></tr>
<tr><td>0.1<Φ≤0.2</td><td colspan="2">3（distance≧10mm）</td></tr>
<tr><td>0.20<Φ≤0.25</td><td colspan="2">2</td></tr>
<tr><td>Φ＞0.3</td><td colspan="2">0</td></tr>
</table>
</td></tr>
<tr><td></td><td></td><td>CTP Cover scratch</td><td>
<table>
<tr><td rowspan="2">Width(mm)</td><td rowspan="2">Ignore (mm)</td><td colspan="3">Acceptable Qty</td></tr>
<tr><td>A</td><td>B</td><td>C</td></tr>
<tr><td>Φ≤0.05</td><td>Ignore</td><td colspan="3">Ignore</td></tr>
<tr><td>0.05<W≤0.06</td><td>L≤4.0</td><td colspan="3">N≤3</td></tr>
<tr><td>0.07<W≤0.08</td><td>L≤3.0</td><td colspan="3">N≤2</td></tr>
<tr><td>0.08<W</td><td colspan="4">Define as spot defect</td></tr>
</table>
</td></tr>
</table>

ISO9001：2008 ISO/TS16949：2009

CTP Cover Pinhole/ Lack of ink

Zone / Size (mm)	Acceptable Qty
	C
Φ≤0.1	Ignore
0.1<Φ≤0.2	3(distance≧10mm)
0.25<Φ≤0.3	2
Φ>0.35	0

CTP Bonding bubble/ accidented spot

Size Φ(mm)	Acceptable Qty	
	A	B
Φ≤0.1	Ignore	
0.15<Φ≤0.2	3(distance≧10mm)	
0.2<Φ≤0.25	2	
Φ>0.25	0	

Assembly deflection

beyond the edge of backlight ≤0.2mm

TP cover broken
X：length
Y：width
Z：height

X	Y	Z
X≤0.5mm	Y≤0.5mm	Z<cover thickness

*Circuitry broken is not allowed.

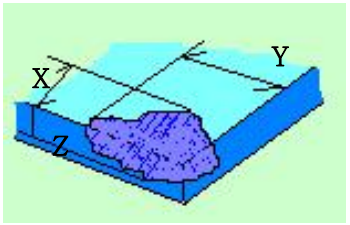

TP cover broken
X：length
Y：width
Z：height

X	Y	Z
X≤0.3mm	Y≤0.3mm	Z<LCD thickness

* Circuitry broken is not allowed.

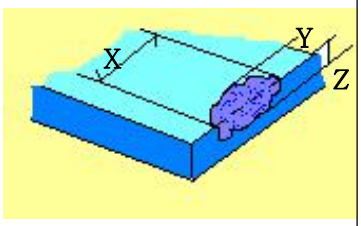

ISO9001：2008 ISO/TS16949：2009

Criteria (functional items)

Number	Items	Criteria (mm)
1	No display	Not allowed
2	Missing segment	Not allowed
3	Short	Not allowed
4	Backlight no lighting	Not allowed
5	TP no function	Not allowed

ISO9001：2008 ISO/TS16949：2009

10. Reliability Test Result

Item	Condition	Inspection after test
High Temperature Operating	70℃,96H	Inspection after 2~4hours storage at room temperature, the sample shall be free from defects: 1.Air bubble in the LCD; 2.Non-display; 3.Missing segments/line; 4.Glass crack; 5.Current IDD is twice higher than initial value.
Low Temperature Operating	-20℃, 96HR	
High Temperature Storage	80℃, 96HR	
Low Temperature Storage	-30℃, 96HR	
High Temperature & High Humidity Storage	+60℃, 90% RH ,96 hours.	
Thermal Shock (Non-operation)	-30℃,30 min ↔ 80℃,30 min, Change time:5min 20CYC.	
ESD test	C=150pF, R=330,5points/panel Air:±8KV, 5times; Contact:±6KV, 5 times; (Environment: 15℃~35℃, 30%~60%).	
Vibration (Non-operation)	Frequency range:10~55Hz, Stroke:1.5mm Sweep:10Hz~55Hz~10Hz 2 hours for each direction of X.Y.Z. (6 hours for total) (Package condition).	
Box Drop Test	1 Corner 3 Edges 6 faces,80㎝(MEDIUM BOX)	

Remark:

1.The test samples should be applied to only one test item.

2.Sample size for each test item is 5~10pcs.

3.For Damp Proof Test, Pure water(Resistance＞10MΩ) should be used.

4.In case of malfunction defect caused by ESD damage, if it would be recovered to normal state after resetting, it would be judged as a good part.

5.Failure Judgment Criterion: Basic Specification, Electrical Characteristic, Mechanical Characteristic, Optical Characteristic.

ISO9001:2008 ISO/TS16949:2009

11. Cautions and Handling Precautions

11.1 Handling and Operating the Module

(1) When the module is assembled, it should be attached to the system firmly.
Do not warp or twist the module during assembly work.
(2) Protect the module from physical shock or any force. In addition to damage, this may cause improper operation or damage to the module and back-light unit.
(3) Note that polarizer is very fragile and could be easily damaged. Do not press or scratch the surface.
(4) Do not allow drops of water or chemicals to remain on the display surface.
If you have the droplets for a long time, staining and discoloration may occur.
(5) If the surface of the polarizer is dirty, clean it using some absorbent cotton or soft cloth.
(6) The desirable cleaners are water, IPA (Isopropyl Alcohol) or Hexane.
Do not use ketene type materials (ex. Acetone), Ethyl alcohol, Toluene, Ethyl acid or Methyl chloride. It might permanent damage to the polarizer due to chemical reaction.
(7) If the liquid crystal material leaks from the panel, it should be kept away from the eyes or mouth. In case of contact with hands, legs, or clothes, it must be washed away thoroughly with soap.
(8) Protect the module from static; it may cause damage to the CMOS ICs.
(9) Use finger-stalls with soft gloves in order to keep display clean during the incoming inspection and assembly process.
(10) Do not disassemble the module.
(11) Protection film for polarizer on the module shall be slowly peeled off just before use so that the electrostatic charge can be minimized.
(12) Pins of I/F connector shall not be touched directly with bare hands.
(13) Do not connect, disconnect the module in the “Power ON” condition.
(14) Power supply should always be turned on/off by the item 6.1 Power On Sequence &6.2 Power Off Sequence

11.2 Storage and Transportation.

(1) Do not leave the panel in high temperature, and high humidity for a long time.
It is highly recommended to store the module with temperature from 0 to 35 ℃ and relative humidity of less than 70%
(2) Do not store the TFT-LCD module in direct sunlight.
(3) The module shall be stored in a dark place. When storing the modules for a long time, be sure to adopt effective measures for protecting the modules from strong ultraviolet radiation, sunlight, or fluorescent light.
(4) It is recommended that the modules should be stored under a condition where no condensation is allowed. Formation of dewdrops may cause an abnormal operation or a failure of the module.
In particular, the greatest possible care should be taken to prevent any module from being operated where condensation has occurred inside.
(5) This panel has its circuitry FPC on the bottom side and should be handled carefully in order not to be stressed.

ISO9001：2008 ISO/TS16949：2009

12. Packing

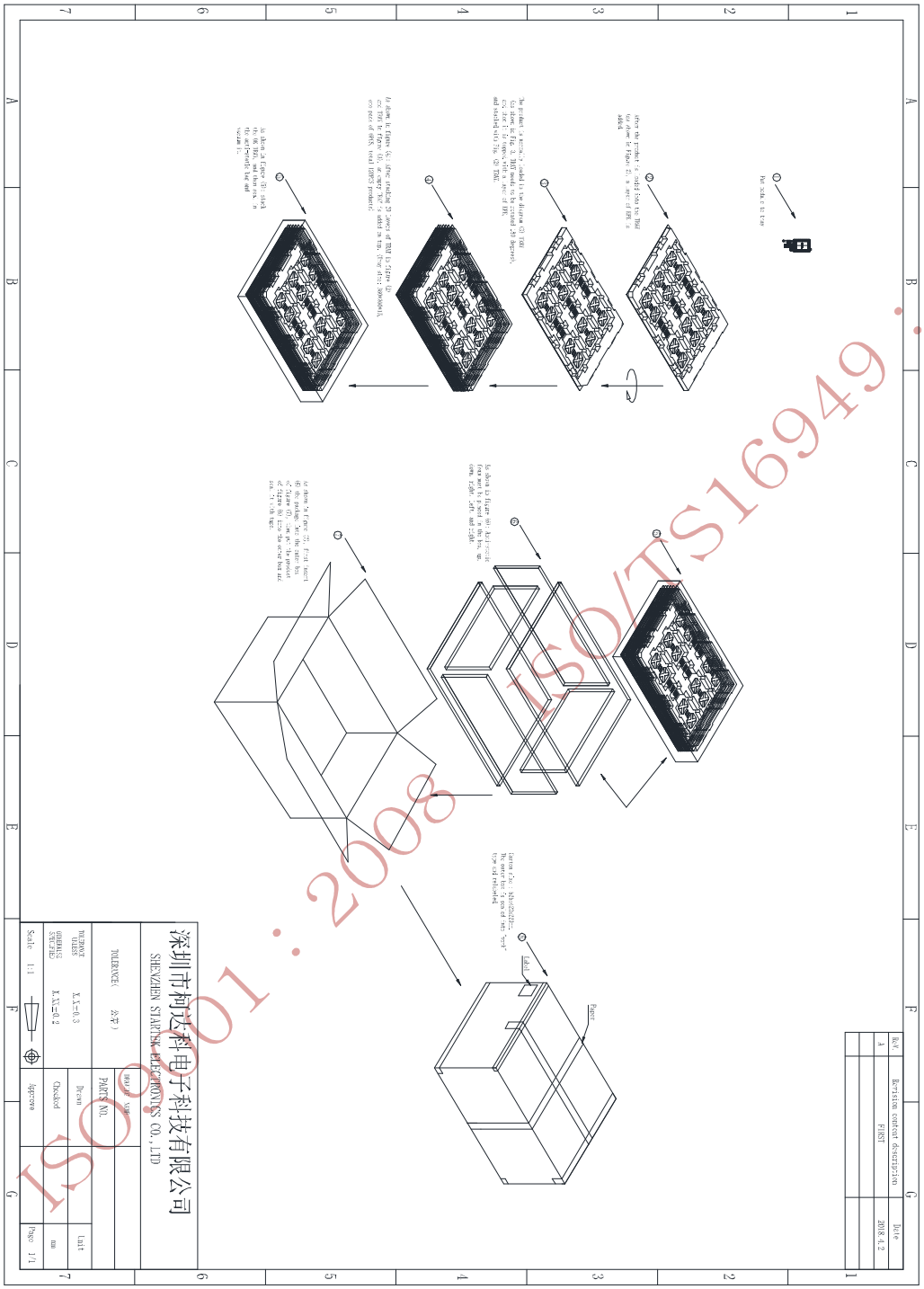

ISO9001：2008 ISO/TS16949：2009